Genetic improvement of Indian cattle

by Dr Prakash Kalarickal, international marketing director, ABS Global Inc, Alpha Building, London Road, Nantwich, Cheshire CW5 7JW, UK.

India is the largest milk producing country in the world with the largest cattle population and the second largest human population. Out of the 615 billion kg of milk produced in the world, 15% is from India. However, milk production per cow per lactation is among the lowest in the world.

India has shown impressive growth in milk production and related gains in per capita availability of milk despite large population increases, but most of the increased milk production has been consumed on the farms where it is produced or absorbed by the informal sector.

Many Indian dairy farmers believe that pure bred cattle such as Holsteins cannot thrive well in India due to the hot weather conditions. Therefore it is important to explore and compare the fundamentals of dairy industry in different parts of the world which has different agro climatic and economic conditions.

United States of America

The USA is the second largest milk producer in the world with 82.654 million metric tonnes of milk in 2006, from just 9.115 million cows with an average production of 9,068kg milk per cow per lactation.

The total milk production continued to increase for several years while the number of cows remained quite stable. About 4.5 million cows are on milk recording which is about 35,000 herds. 93% of the cows in the USA are pure Holsteins and Jersey takes the second place, which is slightly increasing in number.

Some 15% of cows are milked three times a day and 85% of the cows are recorded for somatic cell count (SCC).

As per the genetic base change during February 2006, the average mature equivalent of milk, fat and protein were 11,662kg, 3.6% and 3.0% respectively, based on the herds used for progeny testing (USDA).

Kingdom of Saudi Arabia

Saudi Arabia is a country with totally different climatic and economic conditions which is very successful in industrial dairy farming.

Saudi Arabia is notorious for its extreme hot climatic conditions (above >50°C in summer), yet it has the world's largest dairy farms with world class milk production.

The single largest integrated dairy farm with 16,000 milking cows in one location and another farm with a total of 70,000 milking cows at different locations are in Saudi Arabia.

There are about 100,000 cows in the country and the average milk production per lactation is approximately 8,000-10,000kg per cow in different farms.

The largest farm has 40,000 cows and the smallest farm has 1000 cows. Most of the farms use very high tech machines, modern management procedures and frozen semen from the best bulls in the world for breeding their cows.

Saudi Arabia is a typical example of the best combination of the three key ingredients for success of the dairy farming such as environment, management and genetics.

Most of the farms use an open system with a limited amount of shade for resting where the feed is also supplied. In summer months, the shaded area is cooled by a Koral Cool' system which improves cow comfort.

A large dairy farm in the Middle East. Comfortable cows lie down for at least 12 hours a day, which is necessary for efficient milk production.

Koral cooling in the holding pen.

Dairy farming in India

Milk production in India is about 92 million tonnes per year which is the highest in the world.

Although India is the largest milk producer in the world, India also has the largest cattle population which means the milk produced per cow is at a very low level.

Milk production is expected to increase to 96 million tonnes. At national level, 57% of the production consists of buffalo milk and 43% of cow's milk. Each year buffalo milk production rises by 4% and cow's milk production by just 1.2%.

One of the reasons is that the Indian buffalo herd is expanding by 1.2% per annum, while the dairy cow herd is decreasing by an average of 1% per year due to the droughts in 2002 and 2004 and moreover, the Indian buffaloes produce more milk than cows. Average milk production in India per cow per lactation is approximately 1200kg and the average farm size is about 2-4 cows. There are only very few large dairy farms and very little mechanisation of farms.

India's strength in the sector includes:

- Milk price (farmer) is equal to or more than the international milk price. On average a farmer gets approximately Rs.10-13 per/litre and the average: international milk price is ~$0.30 (~Rs:10.5).
- Low feed cost.
- Low labour cost.
- Low land cost (depending on the location).
- Moderate weather compared to the Middle East.
- Intellectual capital availability.
- High demand for quality milk and milk products.
- Organised dairy cooperatives.

Despite all the favourable factors above, dairy farming in India still remain as 'the poor man's livelihood' although it is changing at a very slow pace!

Some other reasons for the current status of dairy farming include:

- Periodic disease outbreaks and losses all over India.
- Limited availability of good quality fodder in many parts of the country.
- Very few industrial dairy farms.
- Business investors are reluctant to invest in dairy farming.

Continued on page 24

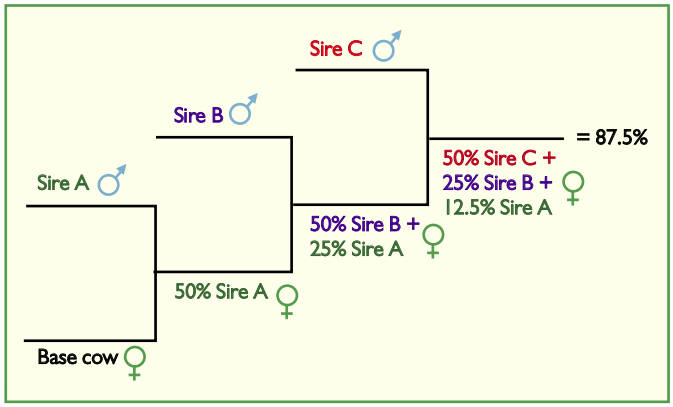

Fig. 1. Genetic progress and hybrid vigour.

Continued from page 23

- Mechanisation is too expensive and not cost efficient!

Most importantly, and probably the main reason for most of the issues above, is that India does not have many good cows to produce enough milk to make the industry profitable!

Some history

In India, the cattle breeding policy is mainly an affair of the state government but the import and health and sanitary regulations are controlled by the central government.

Slaughtering cows is prohibited in most of the states in India except Kerala and West Bengal which limits the selection and improvement of cattle.

Many of the state governments in India started genetic improvement programs during the early 1970s by cross breeding with imported bulls and semen from abroad. The main breeds imported were Holsteins, Jerseys and Brown Swiss.

The importation of high quality genetic material was continued for a few years. The male calves born from these were extensively used for natural mating, semen collection for artificial insemination (AI) and progeny testing with limited facilities and standards.

Semen was collected and sold irrespective of the results of the progeny testing.

Not much reliable data were available for controlling inbreeding or progeny test results.

The milk production in the first generation was quite high but could not be maintained due to erosion of hybrid vigour and increased inbreeding which could not be measured due to lack of accurate data.

Genetic progress

As shown in Fig. 1. genetic improvement is a continuous, slow but sure process if mating is done correctly.

In this example, a base cow is mated by a superior 'Sire A' and the progeny gets 50% from the mother and 50% from the Sire A.

The progeny is then mated by another, more superior Sire B, and the next progeny gets 50% from the Sire B and 25% from Sire A.

Accordingly, in just three generations, the progeny will have 87.5% of the genetic potential of the superior breed.

If any of the chain is broken and mating occurs between related animals, that becomes inbreeding.

Progeny testing time line

14 months	- Semen collected
15 months	- Semen released
16 months	- Semen used on farm
25-27 months	- Daughters born
48-54 months	- Daughters calve
56-60 months	- Bull gets proof

- Only 3000 units of semen collected and released for testing and the bulls will be laid off until proven.
- Minimum 100 daughters evaluated per bull
- Milk recorded
- Independent linear assessment

Information compiled by
- USDA (United States Department of Agriculture)
- Holstein Association USA
- Or similar bodies in other countries.

Only 10% of the bulls tested get proven. In other words, using an unproven bull leaves us with a 90% chance of losing. Therefore, semen for commercial purposes is only collected once the bull is proven and graduated.

The investment in genetics is permanent and passed over to generations. The investment in management is temporary and requires continuous maintenance to keep up the results. However, proper management, proper environment and good genetics are the keys to success in dairy farming.

Inbreeding: a silent thief

Inbreeding is the opposite of hybrid vigour. Based on the research by L. A. Smith et al at VPI in1998, for every 1% inbreeding there is:
- Nearly $24 less net income per cow.
- Loss of about 352kg milk per cow.
- Shorter productive life, -13 days.
- Poor fertility and higher incidence of early embryonic death.
- Less hybrid vigour and more health problems.
- Reduced immunity.

In a 100 cow herd with an average inbreeding of 4%, a dairy producer is losing nearly $10,000 over the life time of the animal.

Why inbreeding?

As the industry continues to improve genetics, the relationship between animals will increase in all cattle. This has been illustrated by the University of Wisconsin-Madison, where they found that in 50 large Holstein and Jersey herds, the average inbreeding of mating was 4.7 and 7.2% respectively.

With so much information on cows and bulls and computer controlled mating recommendations in the USA, if the inbreeding of Holsteins is still around 5%, then the level of inbreeding in any country where there is no control on breeding, bull selection, and not much data on cows, could be astronomically high.

Inbreeding is a problem because:
- Most animals carry a few (unknown) recessive genes with undesirable effects on health or performance.
- These are expressed only when the same allele is inherited from both the sire and dam.
- Inbred animals are more likely to inherit the same recessive gene from both parents.

The relationship between two animals is the percentage of genes two animals have in common because they are members of the same family, for example:
- Identical twins 100%
- Full siblings 50%
- Progeny 50%
- Half siblings 25%
- First cousins 12.5%

Inbreeding can be controlled if the farmer has sufficient information available, such as:
- Proper identification of the cows and knowledge of their cow family.
- Pedigree information of the cow such as the sire and maternal grand sire.
- Information about the sire's pedigree, several generations backwards when selected for mating the cow.

If such information is available, the inbreeding level of the cow can be identified and proper mating can be recommended which can limit inbreeding to desired levels.

The Genetic Mating System (GMS), developed by ABS Global Inc in 1968, contains the database of 450,000 sires around the globe and has the ability to go back seven generations and find relatives of the cows and mating sires and can reduce related matings to limit inbreeding to desired levels.

How to improve genetics

The argument by many farmers in India that foreign breeds of cows cannot survive well has been disproved by the examples of Saudi Arabia and many other countries in the Middle East, Egypt and other countries like Mexico, Brazil and China.

India has a moderate climatic condition compared to many of the countries mentioned above and has several favourable factors such as land, skilled labour, reasonably good quality fodder, extensive distribution networks through the world famous dairy cooperatives and a huge market for milk and milk products.

What India lacks are good quality cows with high genetic potential for producing milk, fat and protein, and which can live a long time.

Therefore, the goals of genetic improvement in India must be:
- To increase the milk production in the shortest period possible.
- Sustain the production (milk, fat and protein) and continued improvement.
- Improve type; body traits, udder composite and feet and legs composite (liner traits).
- Improve management traits such as temperament, somatic cell count, milking speed and fertility.
- Increase longevity of the cows.

Recommendations

Most of the countries which have achieved excellence in dairy farming and genetic improvement have imported purebred animals from other countries.

They have also continued using superior genetics for sustaining the genetic progress as genetic improvement is a continuous process. It is also important to note that countries like the USA, UK, Australia, and most of the western European countries still import better quality genetics from each other to maintain the genetic progress and hybrid

vigour, although all of them have their own progeny testing programs.

The first and fastest way to have better genetics is to import pure-bred pregnant heifers as the countries in the Middle East, Africa and South America have done.

This can be quite expensive and may have several regulatory issues to overcome. Moreover, survival of the imported animals can also be at risk due to the prevalence of many of the diseases and parasites in India.

Importing embryos to produce breeding bulls can prove to be less effective due to the low success rate and high cost. The embryos still need to be implanted in to cows and need to wait until the calves are born and they need to get matured to produce semen. They still need to be proven to use semen which takes 5-6 years! It is also difficult to conduct a progeny testing program because of the non availability of high performing uniform herds.

Importing young bulls for the purpose of producing semen locally is also not recommended due to high initial cost, risk of mortality, difficulties in maintaining the bulls and operational cost.

Most importantly, the risk of inbreeding is high due to the limited of number of bulls and lack of hybrid vigour. This will plunge the country into a negative cycle and create irreversible damage.

Therefore, the most practical, sustainable and economical means to improve genetics is to import frozen semen from proven bulls and to breed the best cows available today in India.

This can be done by the emerging large dairy farms and through the dairy cooperatives which can develop several nucleus herds in different parts of the country to supply good quality heifers in the future.

The most important factor is to maintain the hybrid vigour and not to get into the negative loop of inbreeding.

Therefore, it is important to find semen from different proven bulls continuously from abroad with much higher genetic potential to keep the hybrid vigour moving up in the new generations.

It is also important to avoid closely related matings to reduce inbreeding for which proper identification and data keeping are crucial.

Once there are some standard uniform herds with similar production and body traits which would take a minimum of 4-5 generations, successful progeny testing can be conducted in India along with continued improvement by frozen semen from abroad which will ensure sustainable genetic improvement in such a country with the largest cattle population.

Conclusion

India being a 'giant' in milk production is probably producing the lowest average milk per cow per lactation. This is due to the low genetic potential of the cows, poor management and poor quality feed which is aggravated by high levels of inbreeding.

Therefore the immediate focus in the dairy sector should be to improve the genetics of the cows, either by importing new cows or by using imported frozen semen along with improvement of management, environment and facilities. It is also important to sustain the improvement by continued use of high genetic materials keeping the hybrid vigour up and controlling inbreeding.

Once the basic minimum requirements are achieved, a progeny testing program can be conducted in parallel to the generic improvement program. India can either move forward to produce more milk from fewer number of cows or can limit the amount of milk produced from even fewer number of cows which will leave plenty of feed available for the high producing cows. ■

References are available from the author on request

Liner traits evaluated during progeny testing.